NK Technologies

AT/ATR 3 & 4 Series

'AT/ATR 3 & 4' transducers from NK Technologies combine a high capacity current transformer and a signal conditioner into a single package. The AT version is Average Responding for use on linear (sinusoidal) loads. The ATR version is True RMS for use on distorted waveforms found in VFD or SCR outputs. Available in a solid or split core case.

High Current Transducers

Shown with solid core case.

Applications

Large Pumps
Detect dry run electronically.

Generation
Measure the output of generators.

Electric Heating Elements
— Monitors heater load.
— Faster response than temperature sensors.

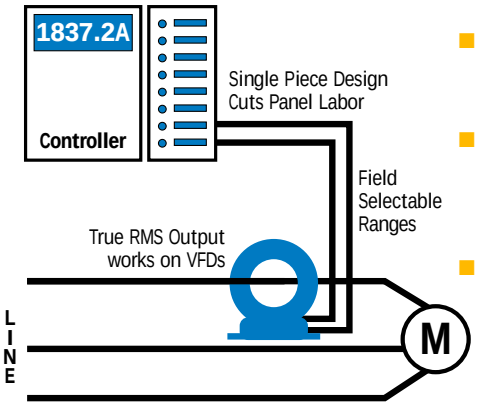

Features

- **Large Aperture**
  Accommodates large conductors or wire bundles.
- **Select the Right Output**
  True RMS technology is accurate on distorted waveforms like VFD or SCR outputs.
  Average Responding—for linear, sinusoidal waveforms
- **Three Jumper Selectable Ranges**
  — Reduces inventory.
  — Eliminates zero and span pots.
- **Isolation**
  Magnetic isolation protects installers and systems.
- **Easy Installation**
  Single piece with integral mounting brackets makes for a simple, solid installation.
- **UL, CUL and CE Approval**
  Accepted worldwide.

Selecting the right transducer:
The current waveform of a typical linear load is a pure sine wave. AT transducers measure the peaks of these sine waves, then calculate the average amperage. This works well on constant speed linear loads in a "clean" power environment. *Select AT transducers for strictly linear loads on "clean" power.*

VFD and SCR output waveforms are rough approximations of a sine wave. There are numerous spikes and dips in each cycle. ATR Transducers use a mathematical algorithm called "True RMS," which integrates the actual waveform over time. The output is the amperage component of the true power (heating value) of the AC current waveform. True RMS is the only way to accurately measure distorted AC waveforms. *Select ATR transducers for nonlinear loads on "noisy" power.*

Know your power…

because with knowledge comes control.

Specifications

Output Signal	4–20mA, Loop-powered
Output Limit	23mA
Accuracy	1.0% FS accuracy, True RMS
Measurement	True RMS or Average Responding (see Ordering Information)
Response Time	500mS (to 90% of step change)
Frequency Range	■ ATR: 10–400Hz ■ AT: 50–60Hz, Sinusoidal
Power Supply	24VDC Nominal; 40VDC Maximum
Isolation Voltage	600VAC
Input Ranges	■ AT/ATR3: 375, 500, 750A ■ AT/ATR4: 1000, 1333, 2000A
Sensing Aperture	3.0" (76mm) dia.
Case	UL 94 Flammability rated
Environmental	–4 to 122°F (–20 to 50°C), 0–95% RH, non-condensing
Listings	UL 508 Industrial Control Equipment (USA & Canada), CE (Pending)

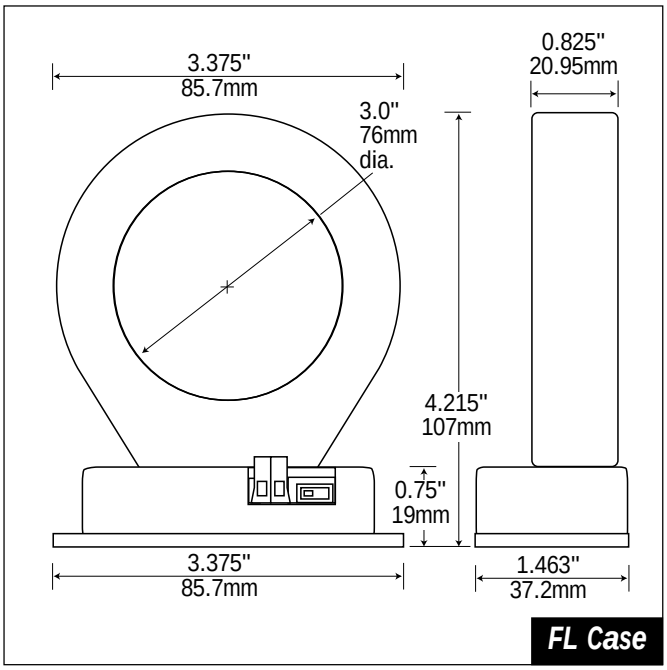

Power Supply

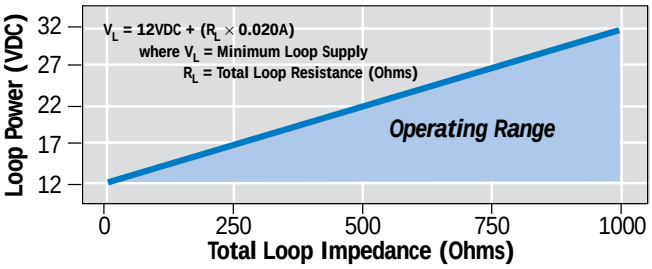

Connections

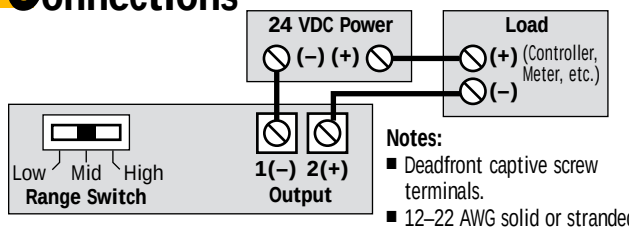

Notes:
- Deadfront captive screw terminals.
- 12–22 AWG solid or stranded.
- Observe polarity.

Ordering Information

Example: ATR3-420-24L-FL

True RMS AC current transducer, 24VDC powered with a 4–20mA output, 375, 500 and 750 amp range in a fixed core case.*

AT [ ] – [ ] – [4 2 0] – [2 4 L] – [F L]

Measurement		Full Scale Ranges		Output Signal		Power Supply		Case*	
R	True RMS	3	375, 500, 750A	420	4–20mA	24L	24VDC Loop-powered	FL	Fixed Core
—	Average Responding	4	1000, 1333, 2000A						
(Blank)									

**Split core version available in the Spring of 2000.*

TRANSCAT®

Visit us at Transcat.com!

35 Vantage Point Drive // Rochester, NY 14624 // Call 1.800.800.5001